Energy and Green Building Codes

Need-to-Know Changes Affecting Contract Glaziers

2019 BEC

March 3, 2019

Thomas D. Culp, Ph.D.

BEC CONFERENCE Las Vegas Caesars Palace MARCH 3-5, 2019

What do we do?

Defend and Promote

- *Defend* against changes harmful to the industry
- *Promote* the positive attributes of glazing in the B&C sector

Energy and Green Codes & Standards:

- International Energy Conservation Code (IECC), ASHRAE 90.1
- International Green Construction Code (IgCC), ASHRAE 189.1
- National Fenestration Rating Council (NFRC)
- National Green Building Standard (NGBS)

BEC CONFERENCE Las Vegas Caesars Palace MARCH 3-5, 2019

U.S. Energy Codes

- Commercial Energy Codes
  - Very active development of ASHRAE 90.1 – finalizing 2019 edition
  - IECC will be active this year, setting 2021 edition

- Starting to see adoption of 2018 IECC and ASHRAE 90.1-2016
  - St. Louis, San Antonio, Philadelphia
  - Nevada. Many other states reviewing.
  - New federal buildings soon (90.1)
  - California Title 24 also has new 2019 edition

- Continued increase in stringency.

COMMERCIAL ENERGY CODE ADOPTION

Always check your local code!

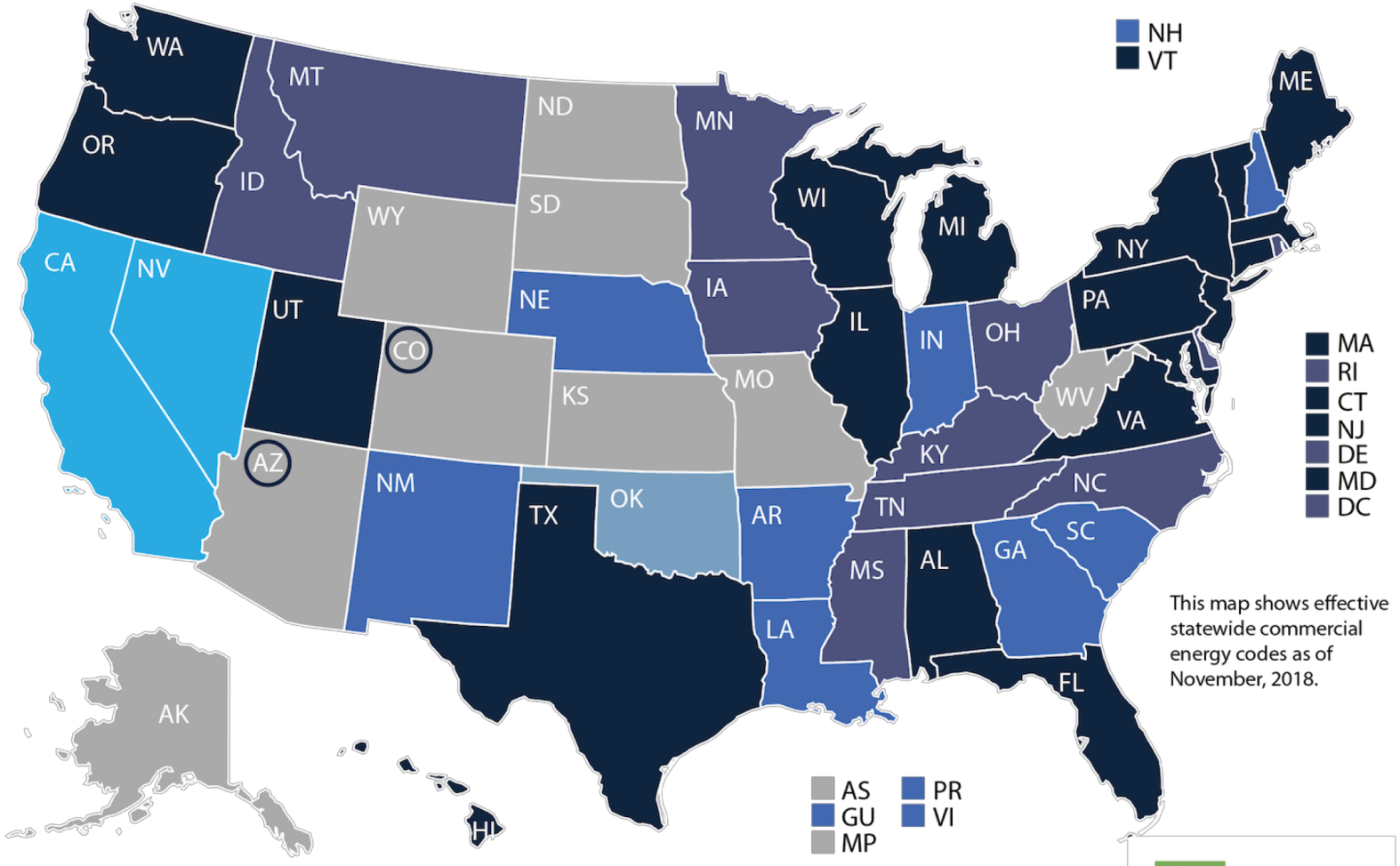

BCAP
Building Codes Assistance Program
An IBTS program

BEC CONFERENCE
Las Vegas
Caesars Palace
MARCH 3-5, 2019

Energy Efficiency Marches On

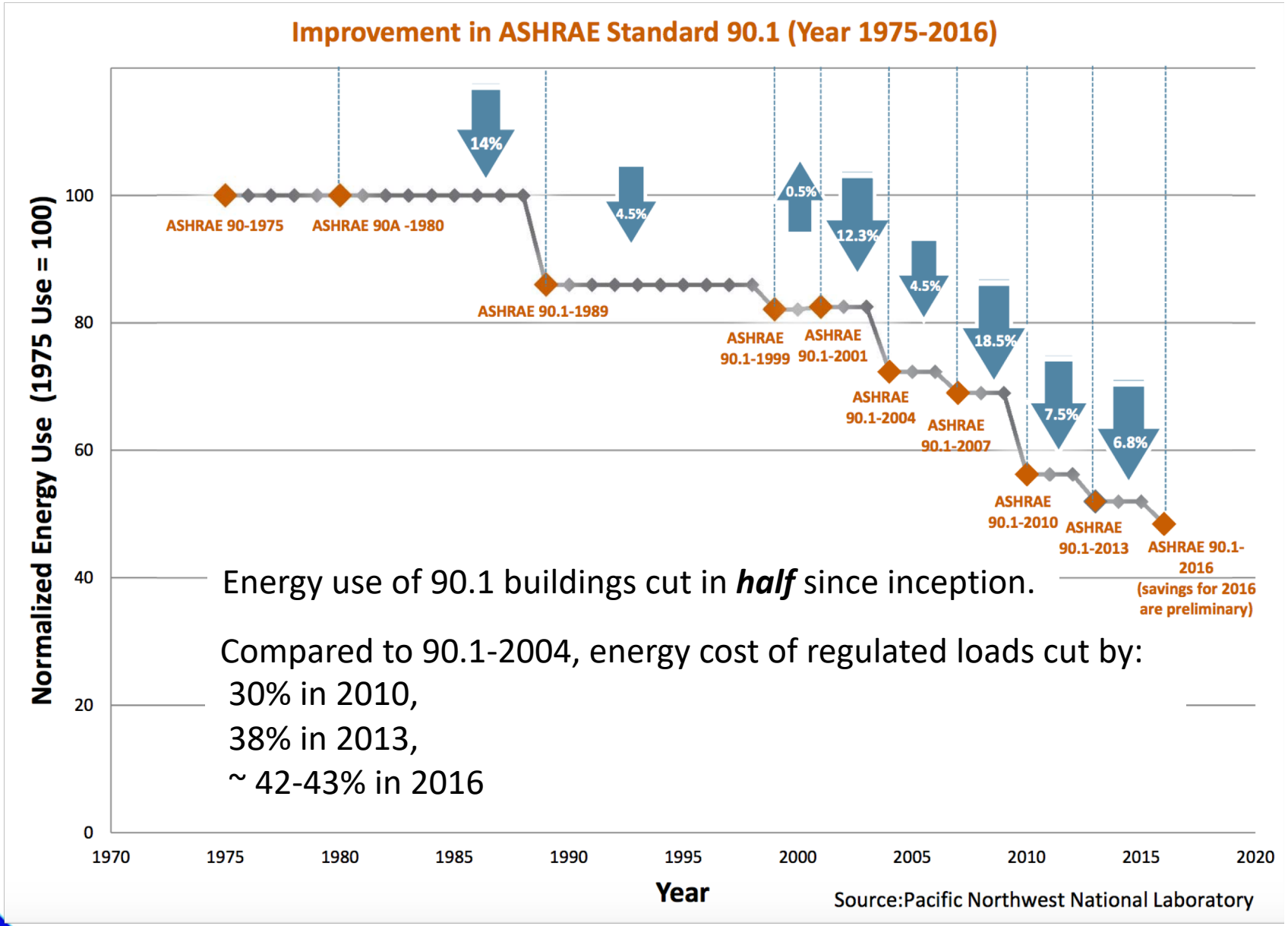

BEC CONFERENCE Las Vegas Caesars Palace MARCH 3-5, 2019

Energy Efficiency Marches On

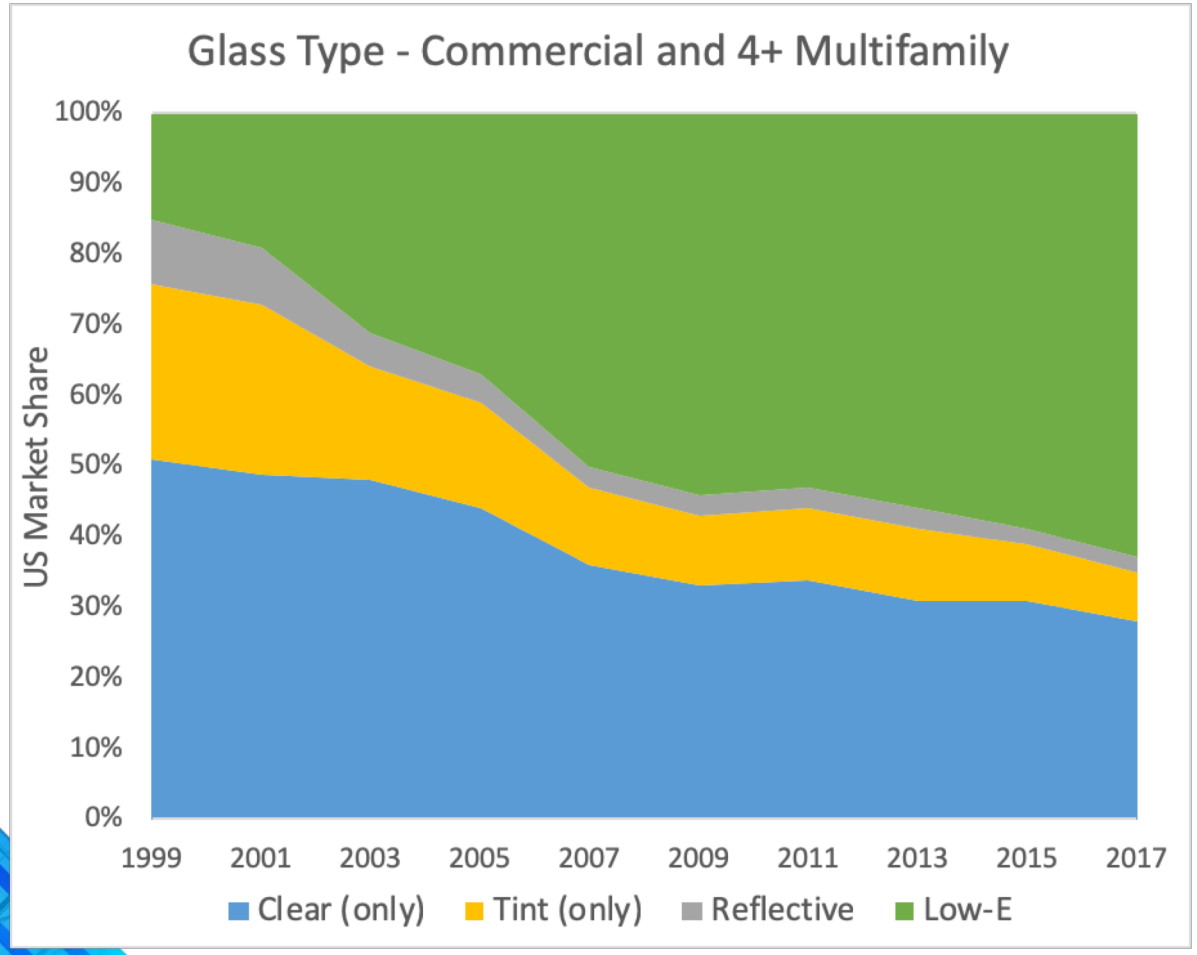

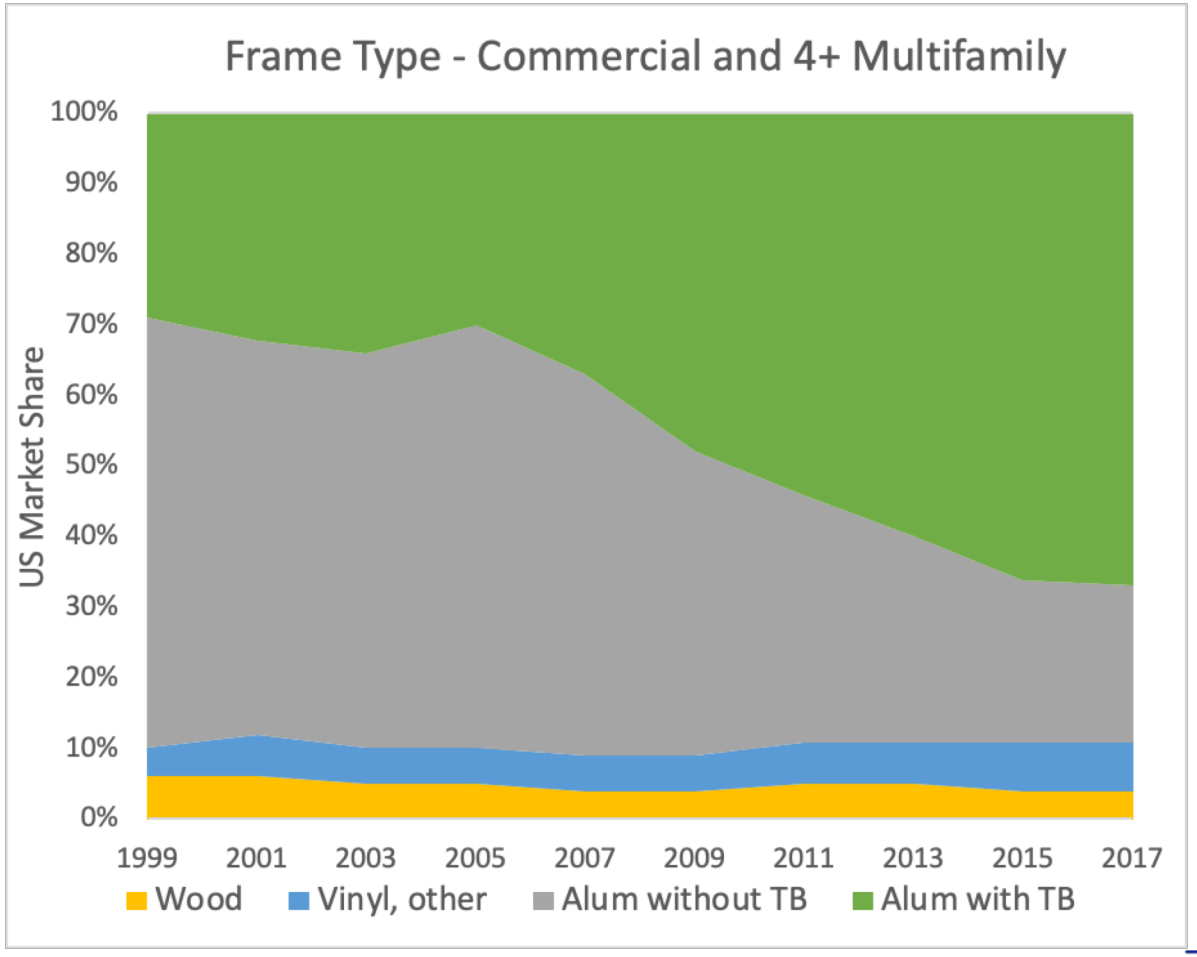

Increased use of low-e glass, thermally broken frames

BEC CONFERENCE Las Vegas Caesars Palace MARCH 3-5, 2019

Historical Ducker data courtesy of AAMA

ASHRAE 90.1 - 2016 and 2018 IECC

- Updated commercial fenestration U and SHGC requirements
  - *U-factors lowered by 3-24%* in 90.1 compared to 2013, bringing them more in line with the IECC.
  - Only *modest reductions in SHGC* in the middle zones 4-5.
- *No changes to window area*
- New *envelope commissioning* in 90.1 .
  - Envelope inspections OR building air leakage testing
  - Increased attention to air barrier continuity and window-wall detailing
- *Stronger daylighting* requirements – more controls, toplighting
- More focus on *existing buildings.*

ASHRAE 90.1 - 2019

- Next step for **commercial fenestration requirements** voted for final publication.
- Continue to push improved framing, warm edge spacers, argon gas fill, and 4th surface low-e coatings while still being cost effective and practical … and with no reductions in window area.
  - 5-17% reduction in U-factor; only modest reductions in SHGC.
  - In many cases, very roughly a "zone shift" between 2016 and 2019: what was required in Zone 7 will move to Zone 6, Zone 6 to Zone 5, etc.
  - 90.1 product categories will match those in IECC, without regard to material type.

BEC CONFERENCE Las Vegas Caesars Palace MARCH 3-5, 2019

ASHRAE 90.1-2019 criteria – vertical fenestration

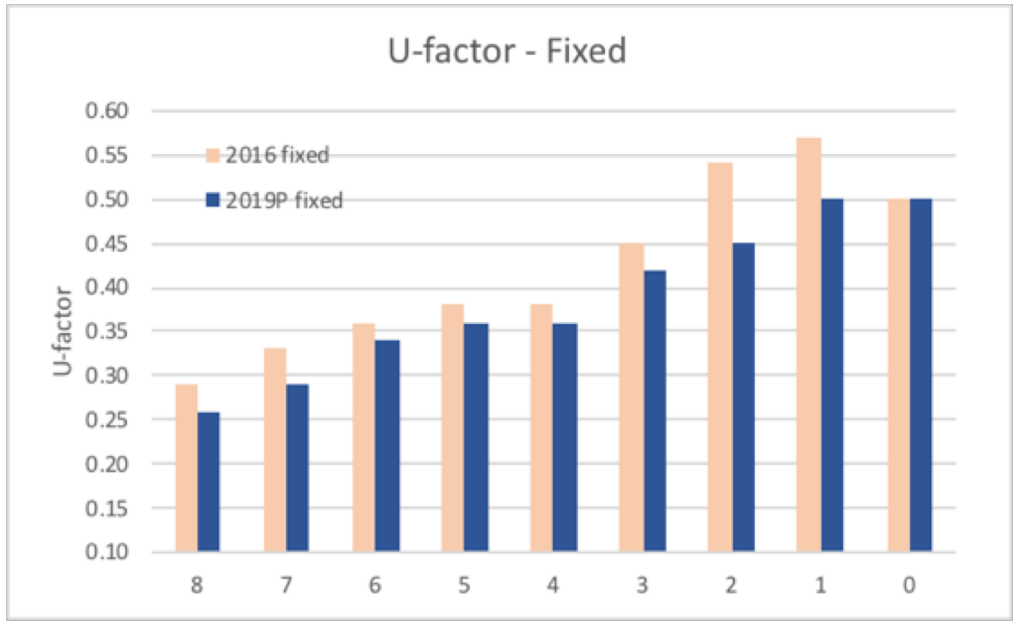

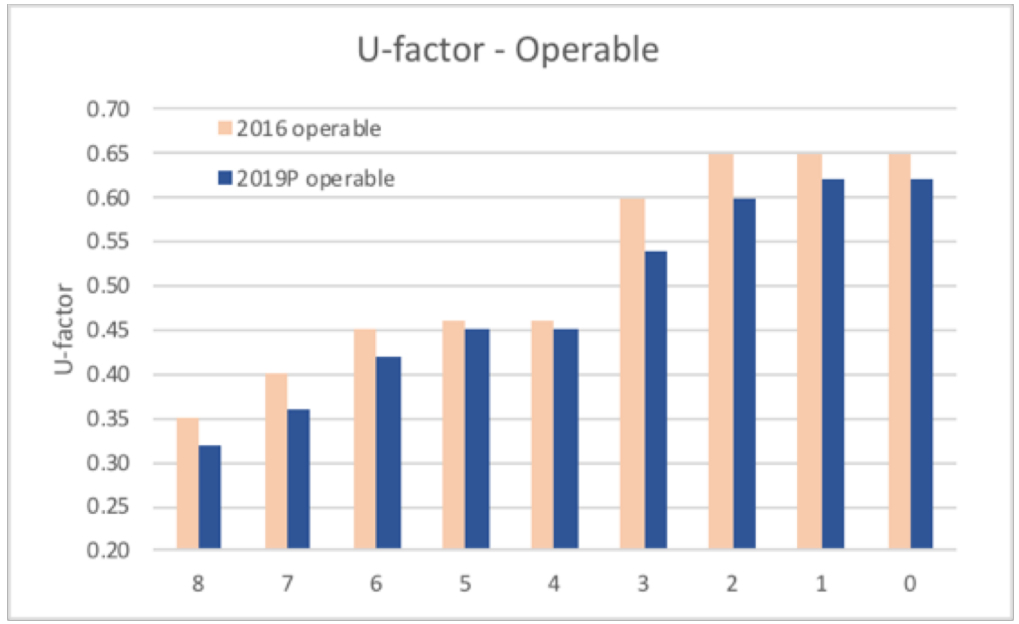

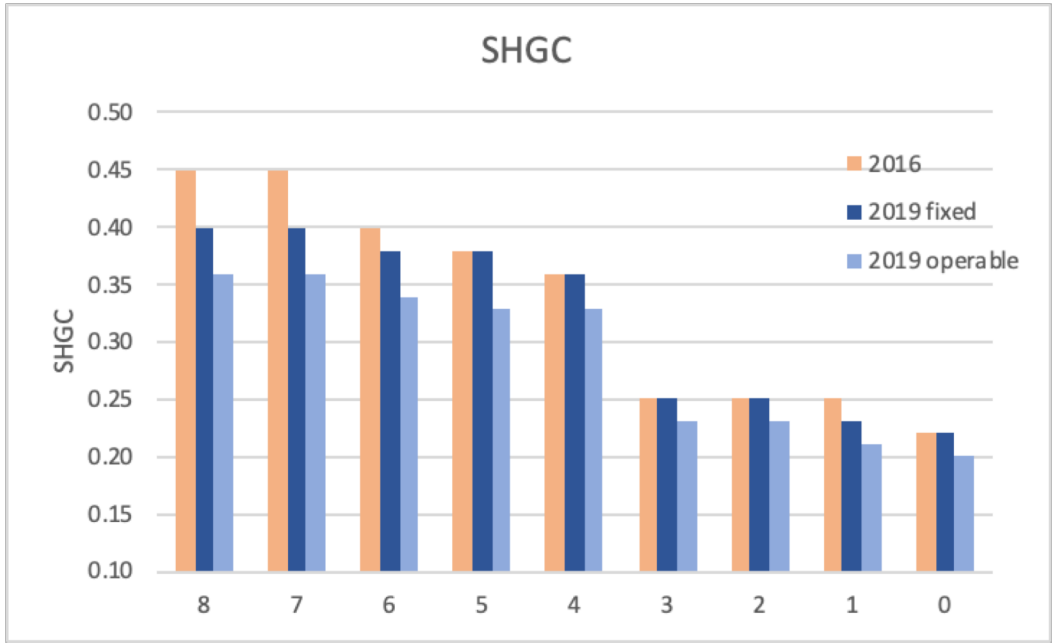

BEC CONFERENCE Las Vegas Caesars Palace MARCH 3-5, 2019

ROUGHLY what is needed to meet U-factor for 90.1-2016?

- **Zone 1:** Low-e, double glazing
- **Zones 2-3:** Low-e double glazing, thermally broken frame
- **Zones 4-5:** Low-e, thermally broken frame and ***pick 1***:
  - argon
  - high performance thermal break
  - two low-e coatings (#2 / #4)
- **Zone 6:** Low-e, thermally broken frame and ***pick 2***:
  - argon
  - warm edge spacer
  - high performance thermal break
  - two low-e coatings (#2 / #4)
- **Zone 7:** Low-e, thermally broken frame and ***pick 3***:
  - argon
  - warm edge spacer
  - high performance thermal break
  - two low-e coatings (#2 / #4)
- **Zone 8:** all of the above in double glazing, or more likely, go to triple

ROUGHLY what is needed to meet U-factor for 90.1-2019?

- **Zone 1:** Low-e, double glazing *+ lower 0.23 SHGC*
- **Zones 2-3:** Low-e double glazing, thermally broken frame
- **Zones 4-5:** Low-e, thermally broken frame and ~~*pick 1*~~ *+ pick 2*:
  - argon
  - high performance thermal break
  - two low-e coatings (#2 / #4)
  - *warm edge spacer*
- **Zone 6:** Low-e, thermally broken frame and ~~*pick 2*~~ *+ pick 3*.
  - argon
  - warm edge spacer
  - high performance thermal break
  - two low-e coatings (#2 / #4)
- **Zone 7:** Low-e, thermally broken frame and ~~*pick 3*~~:
  - argon
  - warm edge spacer
  - high performance thermal break
  - two low-e coatings (#2 / #4)
- **Zone 8:** ~~all of the above in double glazing, or more likely~~, go to triple

Thrm. improved + argon or WE (Z2)

Standard TB + air (Z2, Z3)

all of these in double glazing, or go to triple

ASHRAE 90.1 – what did *not* make 2019 edition?

- Proposals for **trade-off limits** and **thermal bridging** will not be in 90.1-2019, but still being worked on.
  - Need to be careful about trade-off limits for potential *impact on window area*.
    - "Backstop" that places limit on overall envelope performance and components even if show energy equivalence.
    - Draft proposed trade-off limit based on New York stretch code.
      Set to allow a 70% WWR building with prescriptively compliant components, more if go beyond code.
  - Need to watch thermal bridging proposal for *impact on installation details* …

Thermal Bridging

- Reduce bypassing of insulation
  - Metal penetrations can reduce effective R-value of insulation by 20-40%
  - Balconies, parapets, etc.

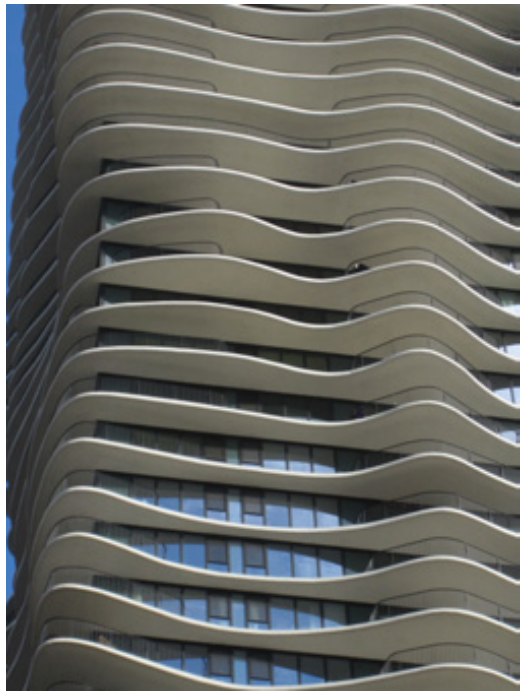

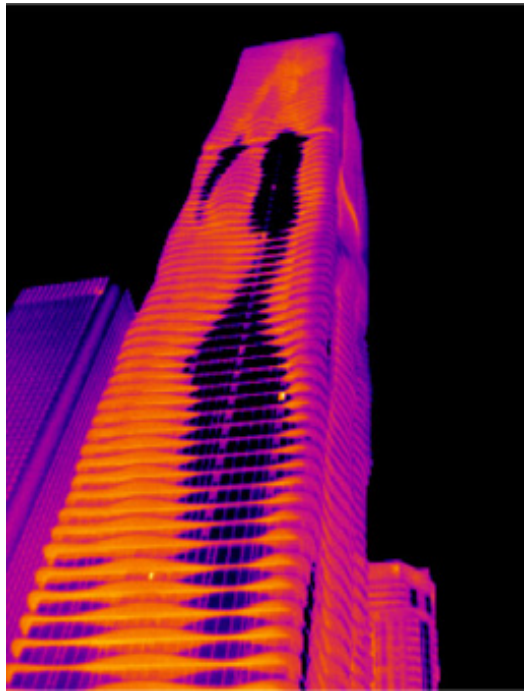

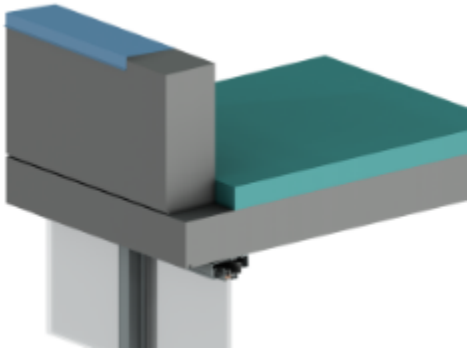

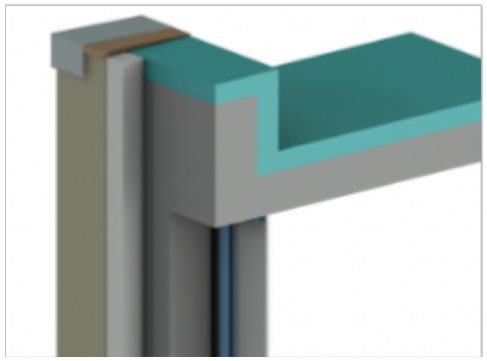

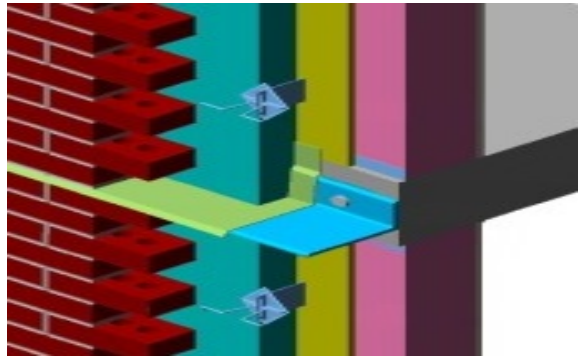

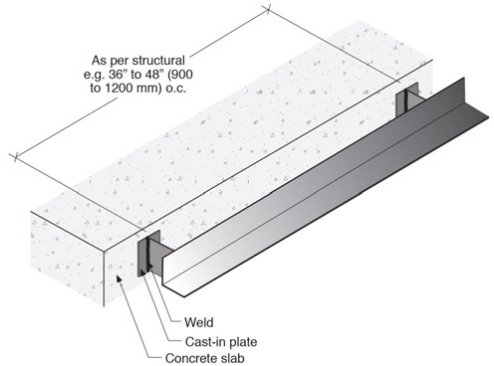

BC Hydro, Morrison Hershfield, Building Science Corp

Thermal Bridging

- Also affects installation details at wall / window interface.
- Control water, air, *and* thermal lines

Table 3: Performance Categories and Default Transmittances for Glazing Transitions

GLAZING TRANSITIONS	Performance Category		Description and Examples	Linear Transmittance	
				Btu / hr ft F	W / m K
		Efficient	**Well aligned glazing without conductive bypasses** Examples: wall insulation is aligned with the glazing thermal break. Flashing does not bypass the thermal break.	0.12	0.2
		Regular	**Misaligned glazing and minor conductive bypasses** Examples: wall insulation is not continuous to thermal break and framing bypasses the thermal insulation at glazing interface.	0.20	0.35
	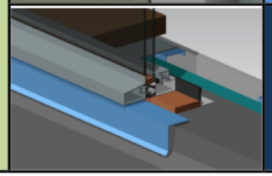	Poor	**Un-insulated and conductive bypasses** Examples: metal closures connected to structural framing. Un-insulated concrete opening (wall insulation ends at edge of opening).	0.29	0.5

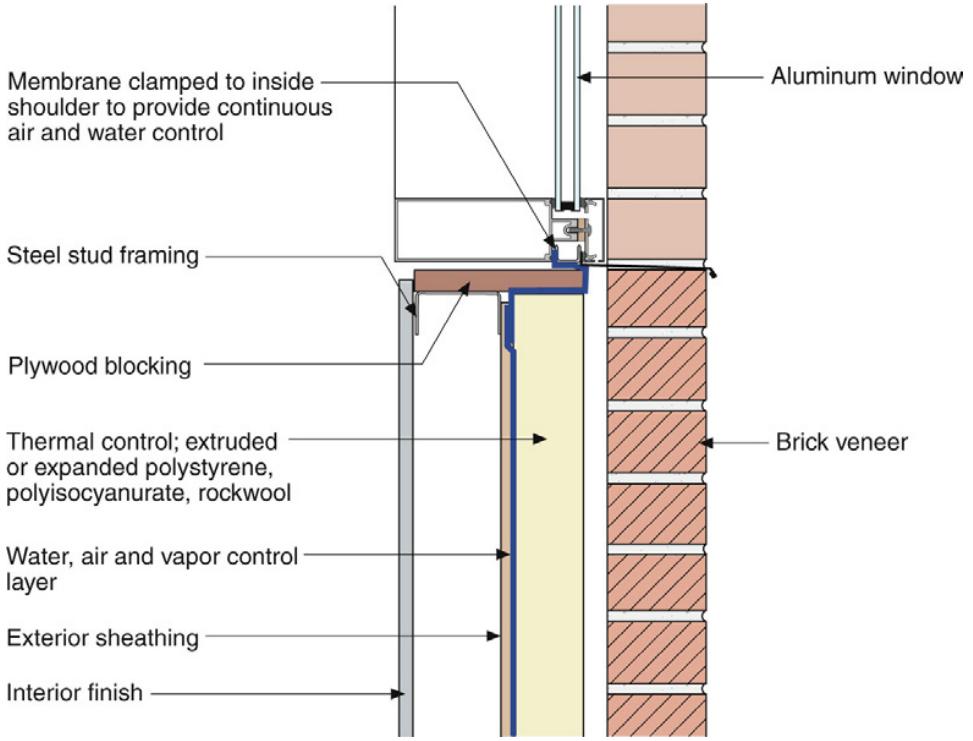

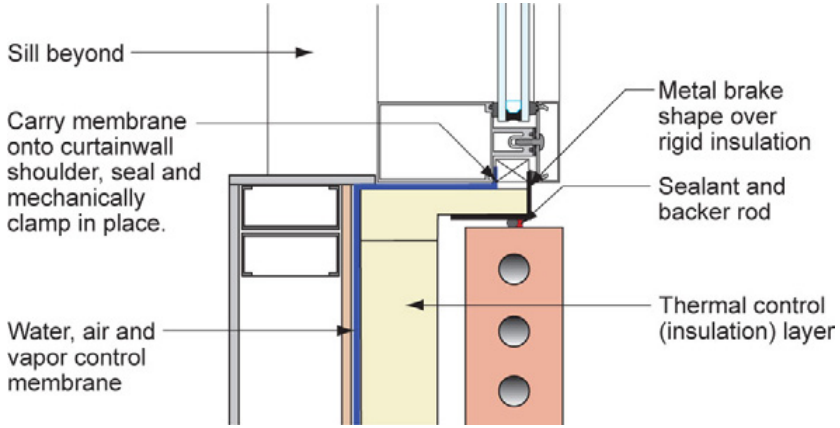

BC Hydro, Morrison Hershfield, Building Science Corp

Thermal Bridging in Codes

- Starting June 3, commercial buildings and highrise residential (7+) in Vancouver will have to meet the “Zero Emissions Building Plan” performance limits.
  - Aggressive energy use, thermal demand, greenhouse gas targets.
  - Modeling *must include effect of thermal bridging* in envelope.
  - Adjust effective U using calculated psi factors (linear thermal bridges) and chi factors (point thermal bridges) for different details.
  - This will also be part of BC Energy’s Step Code.
- Seattle energy code increases amount of continuous insulation required based on % area of metal penetrations.
- ASHRAE 90.1 draft proposal has simplified prescriptive requirements, or trade-off in performance path using calculated psi, chi factors.
  - Only climate zones 4-8.

BEC CONFERENCE Las Vegas Caesars Palace MARCH 3-5, 2019

ASHRAE 90.1 – Thermal Bridging Proposal

- Good intent but highly controversial – received well over 200 negative comments.
  - Now scaling it back, removing controversial areas. This will be for 90.1-*2022*.
  - Removed limitation on connection areas for *sunshades, awnings*.
- For the *wall / window interface*:
  - either align the glazing layer within 2” of the opaque wall insulation, *OR*
  - wrap the exposed area between the window frame and the opaque wall insulation with R3 insulation or wood framing member.

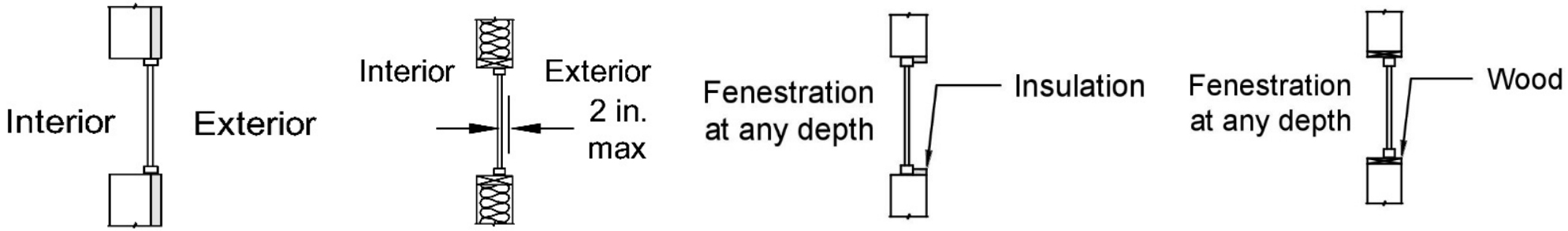

- Purposely simplified (e.g. not including metal panning, alignment of frame thermal break unless use psi factor in performance path.)

BEC
CONFERENCE
Las Vegas
Caesars Palace
MARCH 3-5, 2019

ASHRAE 90.1

- Approved proposal: new prescriptive requirement for minimum amount of **on-site renewable energy** on all new buildings or building sites.
  - Written around **solar PV** capacity of 0.25 W/ft^2 multiplied by the sum of the conditioned floor area of up to the largest 3 floors, but can use any type of renewable system, or make up for it in performance path.
  - This would be the first prescriptive requirement for renewable energy in a national base energy code (not just a voluntary green code).
  - Must go through public review …
    not sure if it will make it in 90.1-2019 or after.

BEC CONFERENCE Las Vegas Caesars Palace MARCH 3-5, 2019

2021 International Energy Conservation Code (IECC)

- 2021 IECC will be set this year (two set of hearings, followed by online vote)
- GICC submitted four proposals:
  - Align the IECC commercial fenestration values with ASHRAE 90.1, jointly submitted by GICC, WDMA, AAMA, AEC, and Chris Mathis.
  - Clarify area-weighted averaging in the commercial energy code. Will help clarify compliance for overall facades such as curtain walls with both fixed lites and operable awnings/vents.
  - Two proposals regarding vacuum insulating glazing in doors for walk-in coolers and freezers (coordinating with AHRI.)
- Proposals from others will be published tomorrow.
  - We already know of one highly flawed proposal that would require all shop-built windows to meet residential requirements.
    - We will also watch for attacks on window area.

BEC CONFERENCE Las Vegas Caesars Palace MARCH 3-5, 2019

California Title 24 - Commercial

- No big changes for fenestration in 2019 … same as 2013 and 2016:

	Max U-factor	Max SHGC	Min VT
Curtain wall / Storefront	0.41	0.26	0.46
Fixed	0.36	0.25	0.42
Operable	0.46	0.22	0.32

Whole product numbers, not just center-of-glass

- For VT, alternately meet effective aperture ≥ 0.11
  Added VT standard for TDDs;
  Minor corrections for atrium daylit zones.

BUT …

Window Area

- As result of our negotiations, no direct attacks or reductions on window area in 90.1-2016, 2019.
  - We did stop some direct attacks in IECC last cycle.
- However, continued *indirect* pressure on window area:
  - Everything else in building is tightening up (HVAC, lighting, DHW, etc.).
  - As a result, there are less options that can be used to trade off to increase glazing area.
  - True in ASHRAE 90.1, IECC, and California Title 24
- How counter?
  - *need to push high performance products to help comply in highly glazed buildings*

BEC CONFERENCE Las Vegas Caesars Palace MARCH 3-5, 2019

Canadian Minimum Energy Performance Standard

- Natural Resources Canada is proposing to regulate *residential* windows under **minimum energy performance standards** (MEPS), like appliances and equipment.
  - Important distinction: *building owner* is liable for meeting building codes, but *manufacturer* is directly liable for any products sold that are regulated by MEPS.
  - Discussion document proposes very aggressive aspirational targets: U-0.28 in 2022, U-0.21 in 2025, U-0.14 in 2030 (and parallel changes in ER).
  - Lowrise residential, but proposed scope also covers small nonresidential buildings (<600 m^2). Problem for commercial entrance doors and storefront systems in small businesses & retail.
  - Also need to clarify that glazing-only replacements not included.
  - Regulation will be developed over 2020-2021 timeframe.

BEC CONFERENCE Las Vegas Caesars Palace MARCH 3-5, 2019

* Note: Canada is not part of my scope of work for NGA, but I filed comments to ensure we are included as a key stakeholder.

Green Building Codes

- *International Green Construction Code (IgCC)* and *ASHRAE 189.1* effectively merged, and now being jointly promoted by ICC, ASHRAE, AIA, IES, and USGBC.
- For 2018 IgCC, *expanded daylighting* in more space types – lighting controls and minimum effective aperture in classrooms, offices, patient rooms, conference rooms, breakrooms, library reading areas.
- For next edition, revised proposal for *minimum views* in offices, classrooms, and patient rooms just approved for public review.
  - Not as strong as LEED or GSA P100, but will continue to promote positive benefits of glazing for IEQ and occupant well-being.
  - Submitted proposal to LEED v4.1 to use consistent language about what qualifies as view (current LEED language allows no frit, pattern, or tint).
- Expanding *renewable energy* requirements to account for both on-site as well as off-site systems.

National Green Building Standard (NGBS)

- NGBS is a **residential green building standard**, co-sponsored by the NAHB and ICC
  - Rapid increase in use, and expanding to cover *mixed use* (commercial + residential) and *highrise residential* buildings.

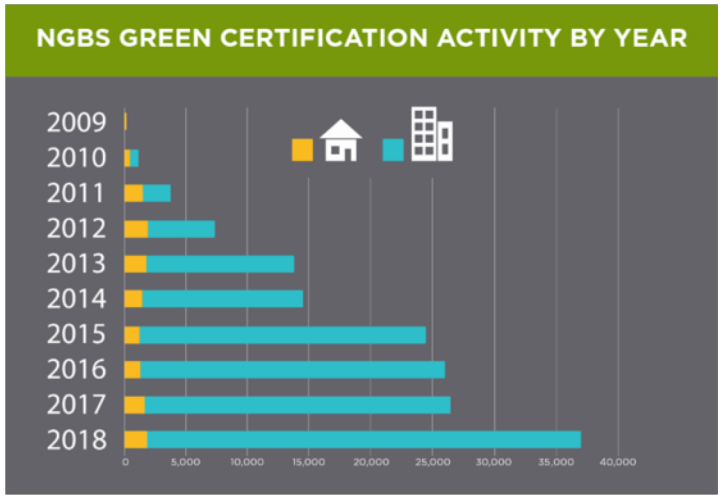

  - In proposed 2020 standard for public review, we included revisions to make the standard more appropriate for mixed use and highrise residential, pointing to the appropriate commercial fenestration requirements.
  - Also includes option to use IgCC/ ASHRAE 189.1.

Questions?

Extra Slides

Over the last 10 years …

Defend

- Stopped multiple attempts to reduce window area
  (Not just WWR and the "Battle for the Wall", much more)
- Stopped proposals with misapplication of products
  (conflicts with other building requirements, cost prohibitive or impractical, favor one technology over another, etc.)
- Stopped proposals that restrict compliance flexibility
  (performance path limits, etc)

Promote

- Expanded daylighting requirements in more spaces
- Advanced requirements to promote energy efficient products where cost effective and practical.
- Increased compliance flexibility for existing building retrofits
- Improved credits for shading, dynamic glazing, BIPV

BEC CONFERENCE Las Vegas Caesars Palace MARCH 3-5, 2019

Climate Zone Map (ASHRAE 90.1-2016, 2019)

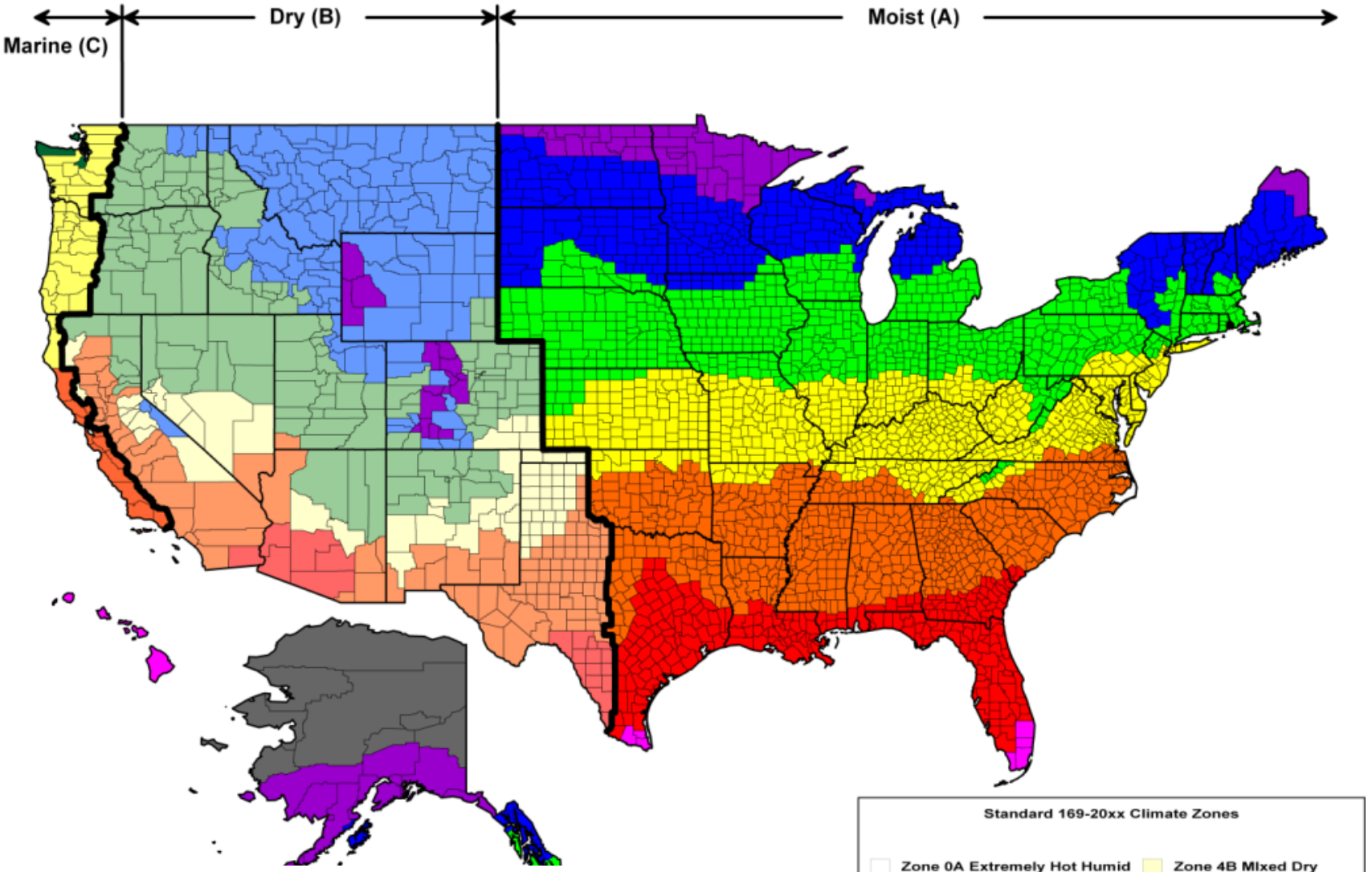

NOTE: IECC as well as previous versions of ASHRAE 90.1 use the older climate zone map. It is likely states will make local amendments to resolve differences between IECC and 90.1.

ASHRAE 90.1-2019 criteria
Nonresidential and Highrise Residential

U-FACTOR	Fixed		Operable		Entrance Door		SHGC		
	90.1-2016	2019 prop.	90.1-2016	2019 prop.	90.1-2016	2019 prop.	90.1-2016	2019 proposal	
Zone	U	U	U	U	U	U	SHGC	SHGC-fixed	SHGC-oper
8	0.29	0.26	0.35	0.32	0.68	0.63	0.45	0.40	0.36
7	0.33	0.29	0.40	0.36	0.68	0.63	0.45	0.40	0.36
6	0.36	0.34	0.45	0.42	0.68	0.63	0.40	0.38	0.34
5	0.38	0.36	0.46	0.45	0.68	0.63	0.38	0.38	0.33
4	0.38	0.36	0.46	0.45	0.68	0.63	0.36	0.36	0.33
3	0.45	0.42	0.60	0.54	0.77	0.68	0.25	0.25	0.23
2	0.54	0.45	0.65	0.60	0.83	0.77	0.25	0.25	0.23
1	0.57	0.50	0.65	0.62	1.10	0.83	0.25	0.23	0.21
0	0.50	0.50	0.65	0.62	0.83	0.83	0.22	0.22	0.20

	SKYLIGHTS / SLOPED GLAZING			
	90.1-2016	2019 prop.	90.1-2016	2019 prop.
Zone	U	U	SHGC	SHGC
8	0.41	0.41	NR	NR
7	0.50	0.44	NR	NR
6	0.50	0.47	0.40	0.40
5	0.50	0.50	0.40	0.40
4	0.50	0.50	0.40	0.40
3	0.55	0.55	0.35	0.30
2	0.65	0.65	0.35	0.30
1	0.75	0.70	0.35	0.30
0	0.75	0.70	0.35	0.30

Vertical Fenestration – Overall SHGC

Climate Zone	0	1	2	3	4	5	6	7	8	
SHGC		0.25	0.25	0.25	0.40	0.40	0.40	0.45	0.45	90.1-2007 2009 IECC 90.1-2010 2012 IECC 90.1-2013 2015 IECC
	0.22	0.25	0.25	0.25	0.36	0.38	0.40	0.45	0.45	90.1-2016 2018 IECC
Fixed:	0.22	0.23	0.25	0.25	0.36	0.38	0.38	0.40	0.40	90.1-2019
Operable:	0.20	0.21	0.23	0.23	0.33	0.33	0.34	0.36	0.36	

- These are the main SHGC requirements for the overall building, but there are variations based on *external shading* and *orientation*.
- Both 90.1 and IECC give credit towards SHGC for exterior shading from overhangs, **sun shades** based on *projection factor* (PF).
  - 90.1 uses multipliers for credit
  - IECC directly lists required SHGC for given PF
- Both ASHRAE and IECC have allowances for *north-facing glazing*.
- ASHRAE has extra provisions to encourage lower SHGC or shading on *east / west sides*.

BEC CONFERENCE Las Vegas Caesars Palace MARCH 3-5, 2019

Vertical Fenestration U-factors, 2010-2019

Climate Zone	0	1	2	3	4	5	6	7	8	
Nonmetal framing		1.20	0.75	0.65	0.40	0.35	0.35	0.35	0.35	90.1-2010, 2009 IECC
	0.32	0.50	0.40	0.35	0.35	0.32	0.32	0.32	0.32	90.1-2013
	0.32	0.50	0.37	0.33/0.35	0.31	0.31	0.30	0.28	0.25	90.1-2016
	Same as metal framing fixed or operable									90.1-2019
	Same as metal framing fixed or operable									2012, '15, '18 IECC
Metal framing, fixed		1.20	0.70	0.60	0.50	0.45	0.45	0.40	0.40	90.1-2010, 2009 IECC
	0.50	0.57	0.57	0.50	0.42	0.42	0.42	0.38	0.38	90.1-2013
	0.50	0.57	0.54	0.45/0.49	0.38	0.38	0.36	0.33	0.29	90.1-2016
	0.50	0.50	0.45	0.42	0.36	0.36	0.34	0.29	0.26	90.1-2019
		0.50	0.50	0.46	0.38	0.38	0.36	0.29	0.29	2012, '15, '18 IECC
Metal framing, operable		1.20	0.75	0.65	0.55	0.55	0.55	0.45	0.45	90.1-2010, 2009 IECC
	0.65	0.65	0.65	0.60	0.50	0.50	0.50	0.40	0.40	90.1-2013
	0.65	0.65	0.65	0.60	0.46	0.46	0.45	0.40	0.35	90.1-2016
	0.62	0.62	0.60	0.54	0.45	0.45	0.42	0.36	0.32	90.1-2019
		0.65	0.65	0.60	0.45	0.45	0.43	0.37	0.37	2012, '15, '18 IECC
Metal framing, entrance door		1.20	1.10	0.90	0.85	0.80	0.80	0.80	0.80	90.1-2010, 2009 IECC
	0.83	1.10	0.83	0.77	0.77	0.77	0.77	0.77	0.77	90.1-2013
	0.83	1.10	0.83	0.77	0.68	0.68	0.68	0.68	0.68	90.1-2016
	0.83	0.83	0.77	0.68	0.63	0.63	0.63	0.63	0.63	90.1-2019
		1.10	0.83	0.77	0.77	0.77	0.77	0.77	0.77	2012, '15, '18 IECC

Note: Starting with 90.1-2019, both 90.1 and IECC will only have fixed, operable, and entrance door categories that apply to both metal and nonmetal

BEC CONFERENCE Las Vegas Caesars Palace MARCH 3-5, 2019